SD 236, SD 248 AND SD 260
SD SLICE SERIES PIZZA OVENS
REPLACEMENT PARTS LIST

EFFECTIVE APRIL 4, 2024

Superseding All Previous Parts Lists.
The Company reserves the right to make substitution in the event that items specified are not available.
ERRORS: Descriptive and/or typographic errors are subject to correction.

MARSAL
42 Allen Martin Drive, Essex Junction, VT 05452 USA Telephone: (802) 658-6600 Fax: (802) 864-0183
www.marsalovens.com

P/N 72143 Rev N

TABLE OF CONTENTS

BURNER COMPARTMENT COMPONENTS

SD 236 OVEN 3

SD 248 OVEN 4

SD 260 OVEN 5

BAKING COMPARTMENT COMPONENTS

SD 236 OVEN 6

SD 248 OVEN 7

SD 260 OVEN 8

BURNER AND PIPING PARTS

SD 236 OVEN 9

SD 248 OVEN 10

SD 260 OVEN 11

PILOT UPGRADE SAFETY VALVE KIT FOR OVENS BUILT BEFORE 10/2008 12

GAS CONVERSION KITS 12

DOOR PARTS

SD 236 OVEN 13

SD 248 OVEN 14

SD 260 OVEN 15

SD CONTROL DOOR AND FLUES

ALL OVENS 16

CE OVEN COMPONENTS

ALL OVENS 17

ACCESSORIES 18

BURNER COMPARTMENT COMPONENTS

SD 236 OVEN

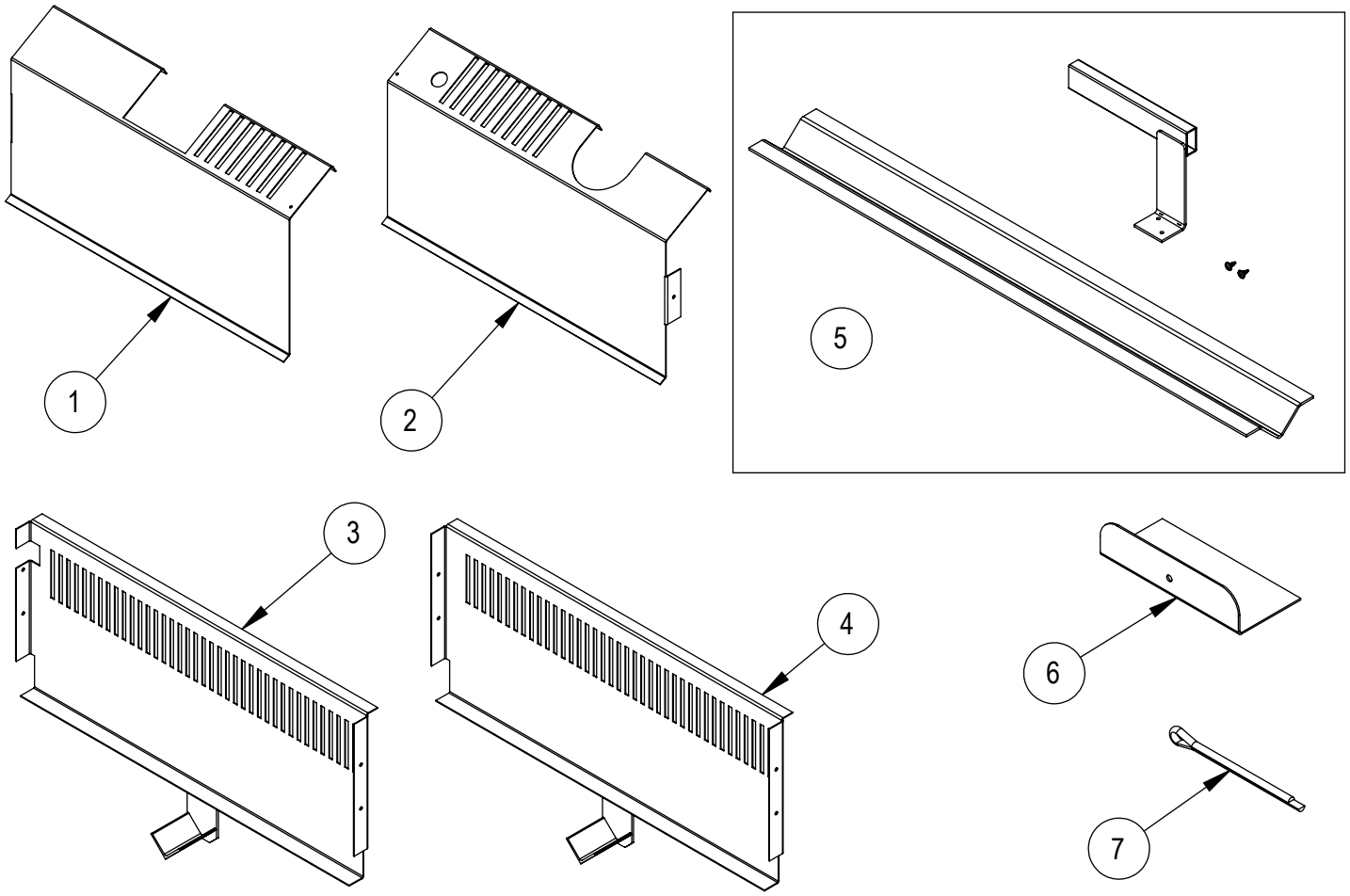

REF. NO.	PART NO.	DESCRIPTION
1	70749	HEAT SHIELD. LH
2	70748	HEAT SHIELD, RH
3	71312	SD BAFFLE ASSY, LH
4	71313	SD BAFFLE ASSY, RH

REF. NO.	PART NO.	DESCRIPTION
5	71894	DEFLECTOR KIT
6	70057	FD HOLD DOWN
7	70084	COTTER PIN, 7/64 X 1.75

BURNER COMPARTMENT COMPONENTS

SD 248 OVEN

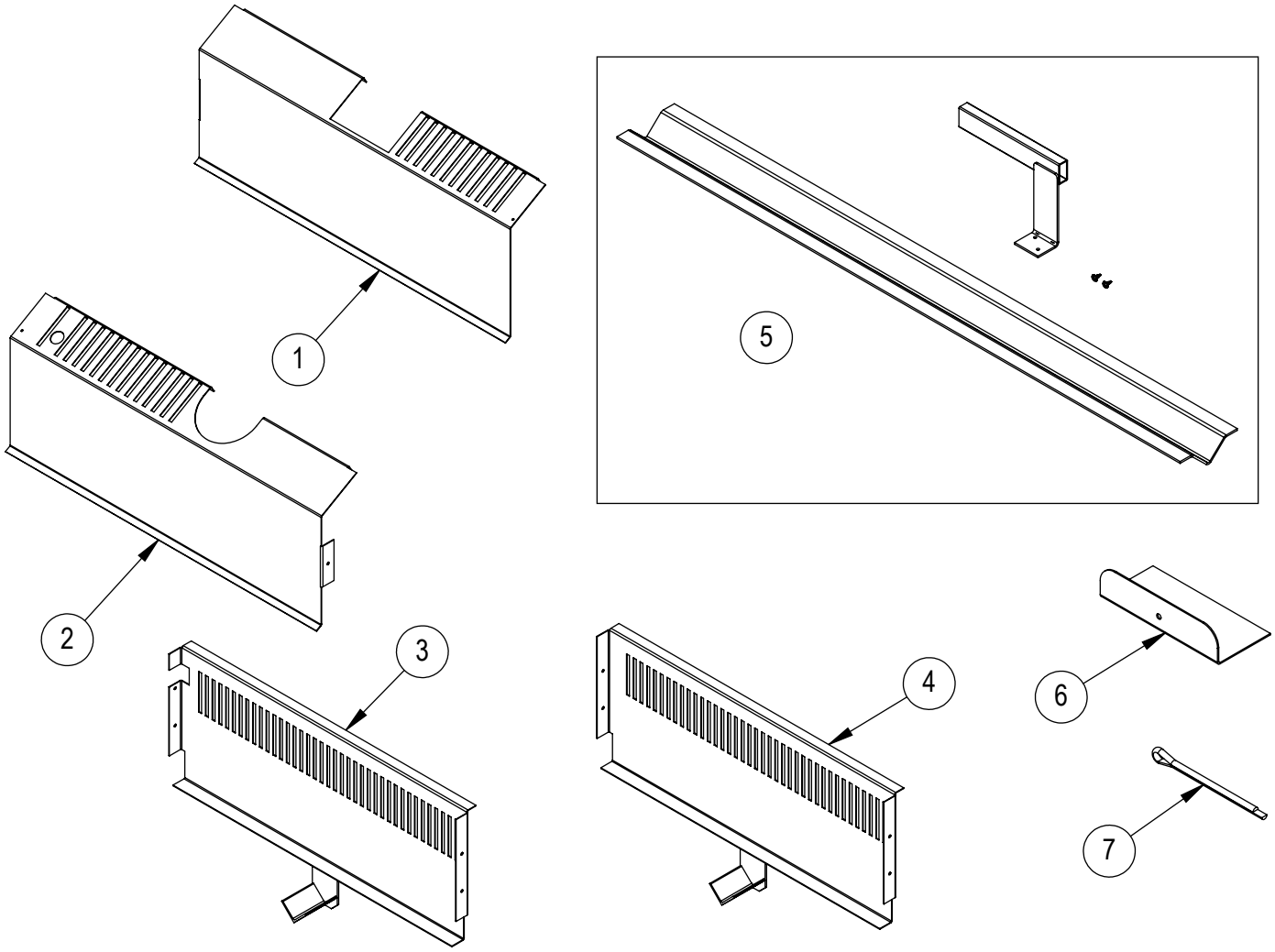

REF. NO.	PART NO.	DESCRIPTION
1	71116	HEAT SHIELD, LH
2	71117	HEAT SHIELD, RH
3	71345	SD BAFFLE ASSY, LH
4	71346	SD BAFFLE ASSY, RH

REF. NO.	PART NO.	DESCRIPTION
5	71898	DEFLECTOR KIT
6	70057	FD HOLD DOWN
7	70084	COTTER PIN, 7/64 X 1.75

BURNER COMPARTMENT COMPONENTS

SD 260 OVEN

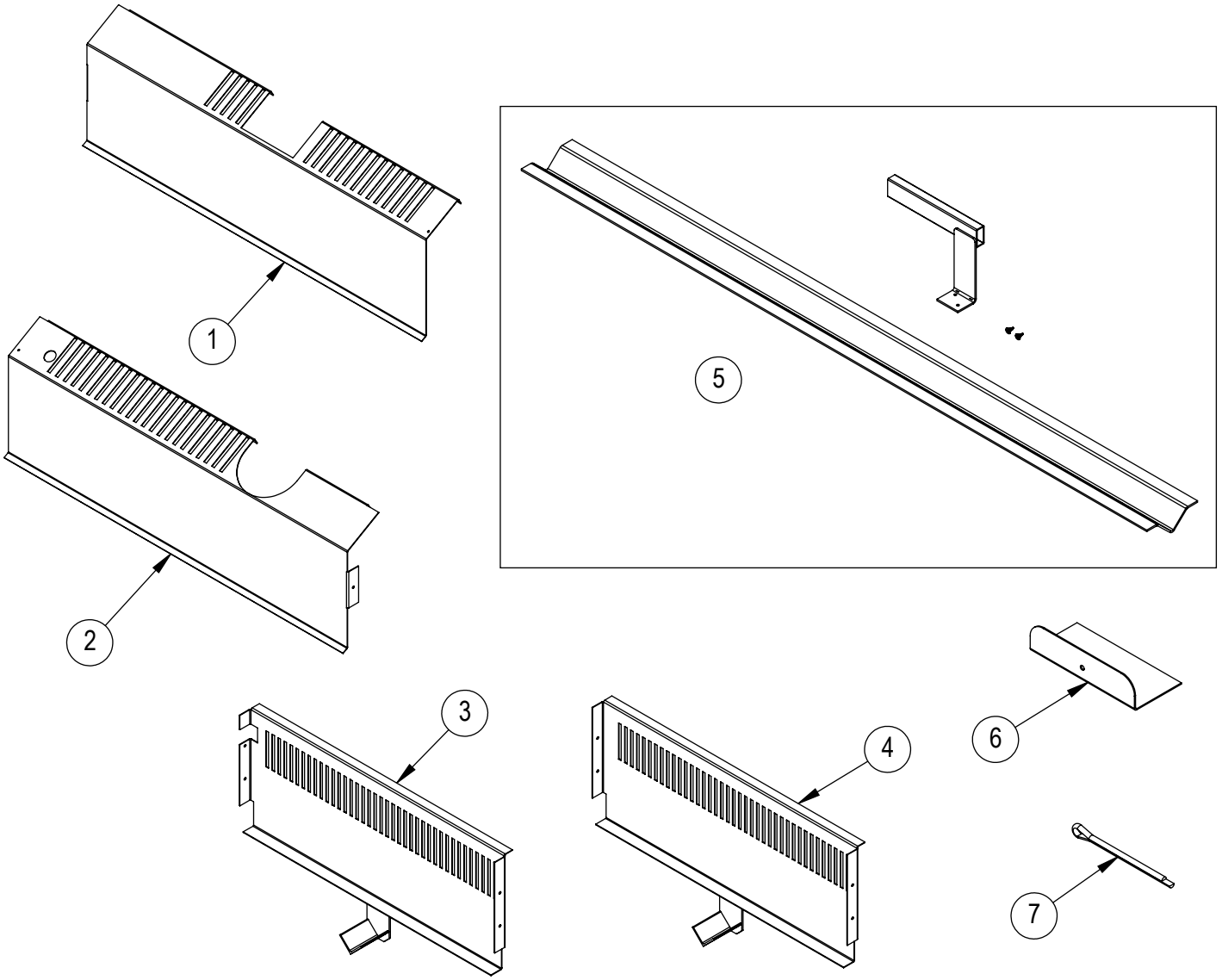

REF. NO.	PART NO.	DESCRIPTION
1	71023	HEAT SHIELD, LH
2	71024	HEAT SHIELD, RH
3	71345	SD BAFFLE ASSY, LH
4	71346	SD BAFFLE ASSY, RH

REF. NO.	PART NO.	DESCRIPTION
5	71897	DEFLECTOR KIT
6	70057	FD HOLD DOWN
7	70084	COTTER PIN, 7/64 X 1.75

BAKING COMPARTMENT COMPONENTS

SD 236 OVEN

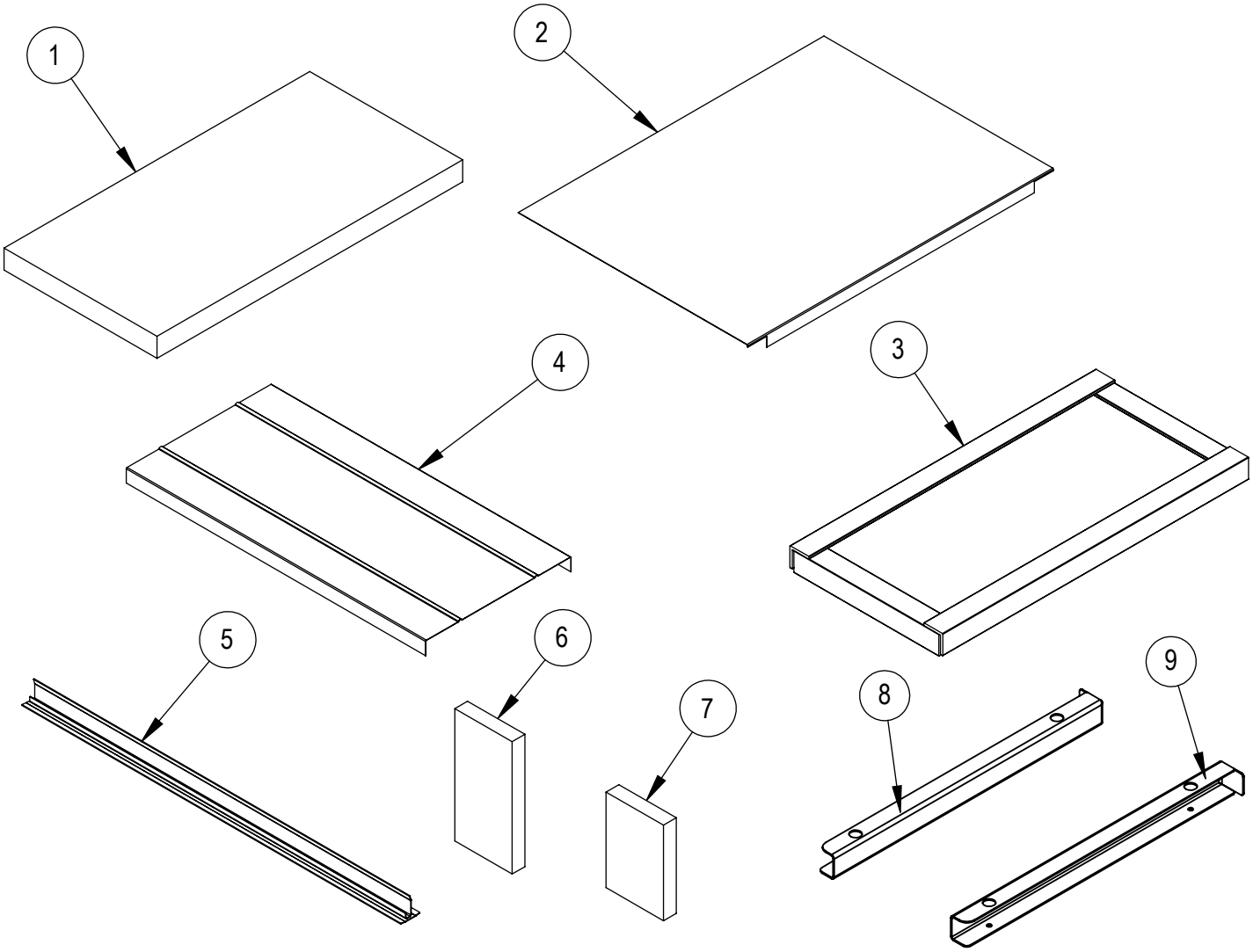

REF. NO.	PART NO.	DESCRIPTION
1	70388	DECK STONE 12 X 24 X 1-1/2
2	70464	BRICK PLATE
3	70462	BRICK BASE, 24 X 12
4	70463	BRICK BAFFLE
5	70433	CRUMB CATCHER, 29-3/4" LG

REF. NO.	PART NO.	DESCRIPTION
6	70391	CEILING BRICK, 1 X 4-1/2 X 9
7	70458	CEILING BRICK, 1 X 4-1/2 X 7
8	70697	BRICK BRACKET, TOP LEFT
9	70698	BRICK BRACKET, TOP RIGHT

BAKING COMPARTMENT COMPONENTS

SD 248 OVEN

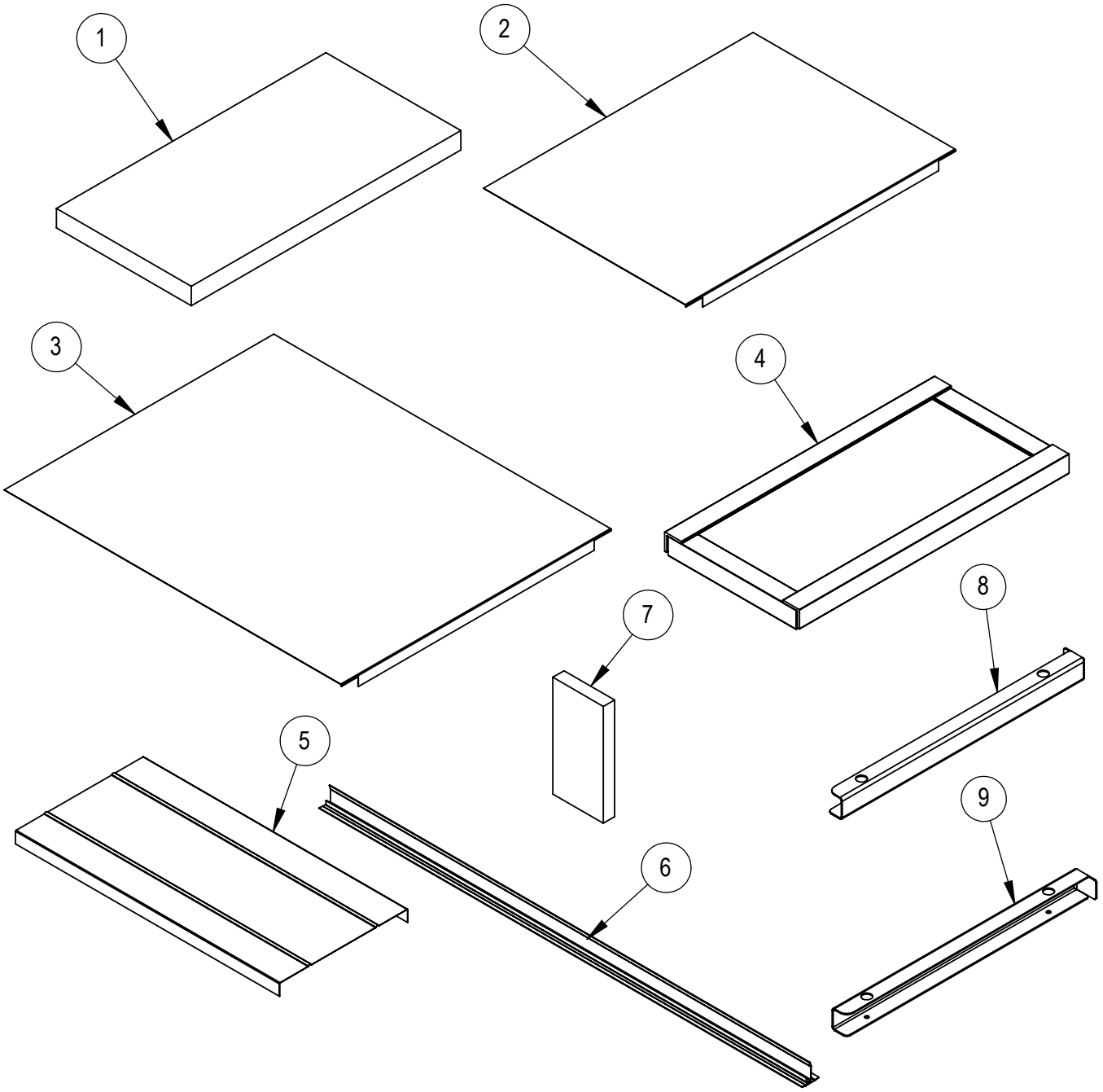

REF. NO.	PART NO.	DESCRIPTION
1	70388	DECK STONE 12 X 24 X 1-1/2
2	70464	BRICK PLATE, LH
3	70465	BRICK PLATE, RH
4	70462	BRICK BASE, 24 X 12
5	70463	BRICK BAFFLE

REF. NO.	PART NO.	DESCRIPTION
6	70475	CRUMB CATCHER, 43" LG
7	70391	CEILING BRICK, 1 X 4-1/2 X 9
8	70697	BRICK BRACKET, TOP LEFT
9	70698	BRICK BRACKET, TOP RIGHT

BAKING COMPARTMENT COMPONENTS

SD 260 OVEN

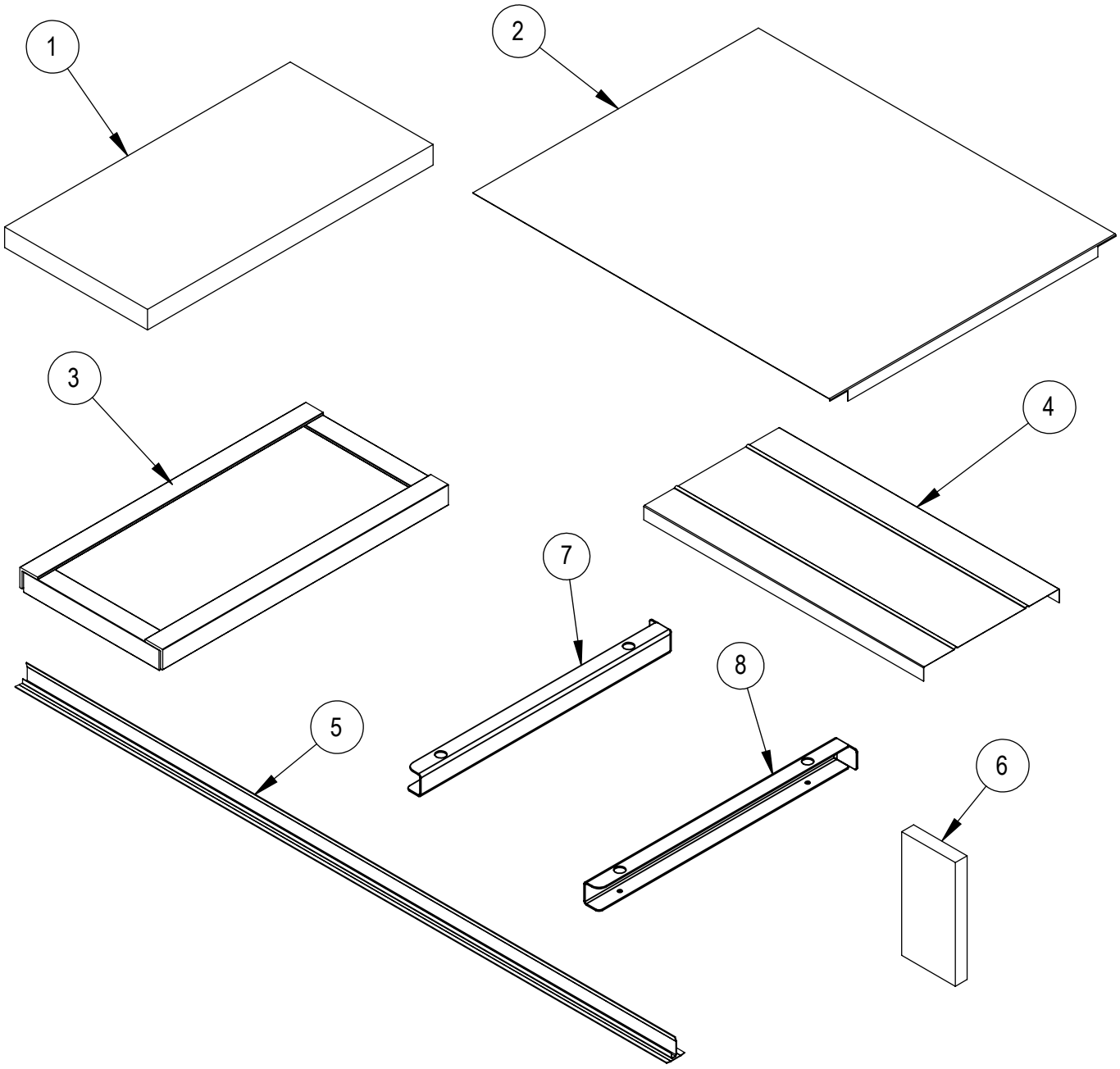

REF. NO.	PART NO.	DESCRIPTION
1	70388	DECK STONE 12 X 24 X 1-1/2
2	70465	BRICK PLATE
3	70462	BRICK BASE, 24 X 12
4	70463	BRICK BAFFLE

REF. NO.	PART NO.	DESCRIPTION
5	70478	CRUMB CATCHER, 54-3/4" LG
6	70391	CEILING BRICK, 1 X 4-1/2 X 9
7	70697	BRICK BRACKET, TOP LEFT
8	70698	BRICK BRACKET, TOP RIGHT

BURNER AND PIPING PARTS

SD 236 OVEN

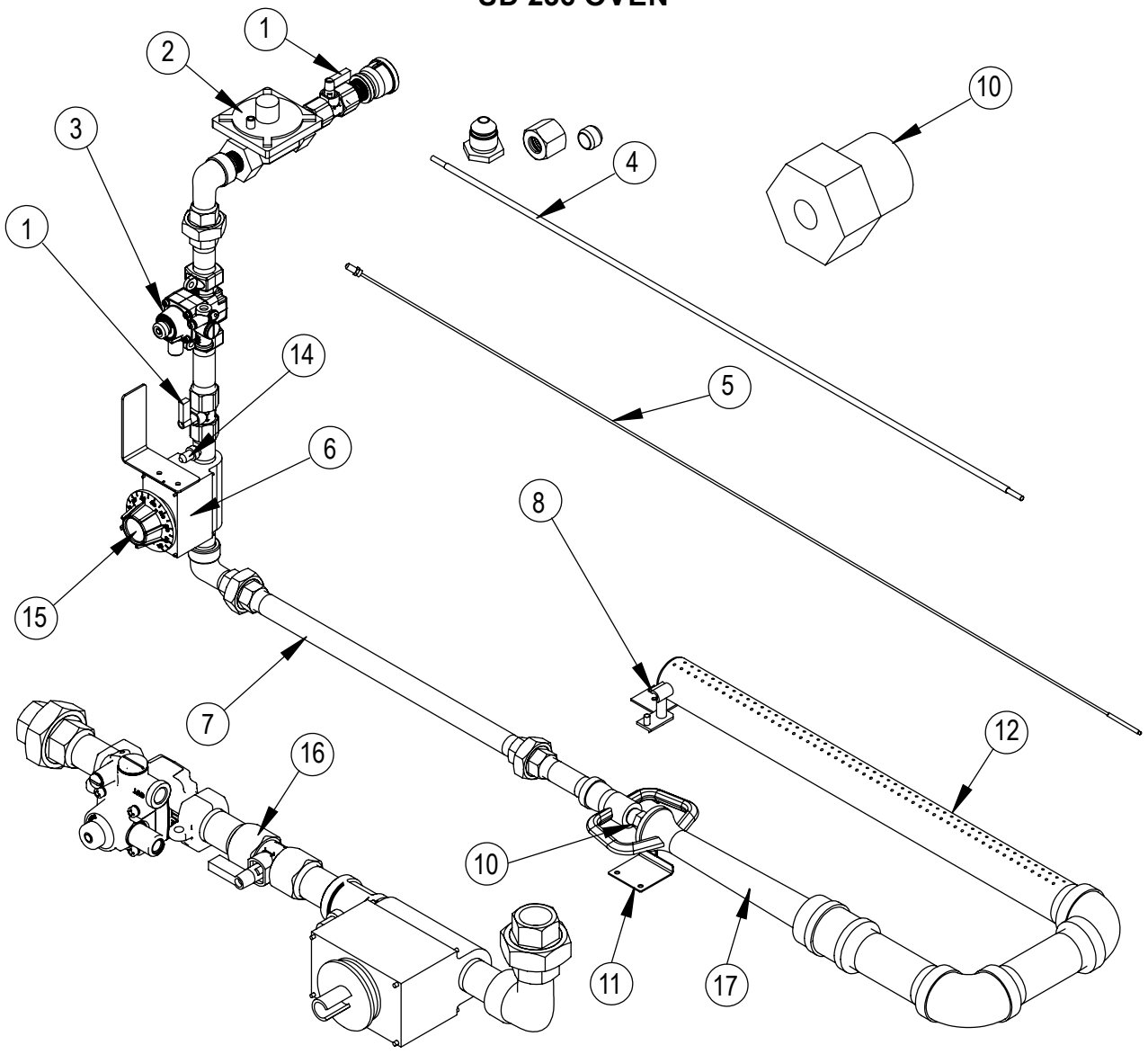

REF. NO.	PART NO.	DESCRIPTION
1	70380	BALL VALVE, 1/2" NPT
2*	71881	GAS REGULATOR, NAT
2*	71882	GAS REGULATOR, LP
3*	55127	TS11 SAFETY VALVE, 1/4" TUBE FIT
4	72290	PILOT TUBE KIT, 42"
5	100653	THERMOCOUPLE, 48" LEAD
6*	71880	THERMOSTAT, 300-650 W/KNOB
7	70729	NIPPLE, 1/2 X 14-1/4
8	72708	PILOT UPGRADE KIT, NAT OR LP
10	70382	ORIFICE, #33 (NAT)
10	70471	ORIFICE, #54 (LP)
11	70049	VENTURI STOPPER

REF. NO.	PART NO.	DESCRIPTION
12	70760	BURNER ASSY
14	70434	PRESSURE TAP, 1/8
15*	10392	KNOB, THERMOSTAT
16	70040	STACK ASSEMBLY
17	70094	VENTURI
	72596	VENTURI DISK
	72597	ORFICE HOLDER, MAIN BURNER
	72598	LOCKNUT, HEX 5/8"-18

** SEE "CE APPROVED COMPONENTS" AT THE END OF THIS DOCUMENT*

BURNER AND PIPING PARTS

SD 248 OVEN

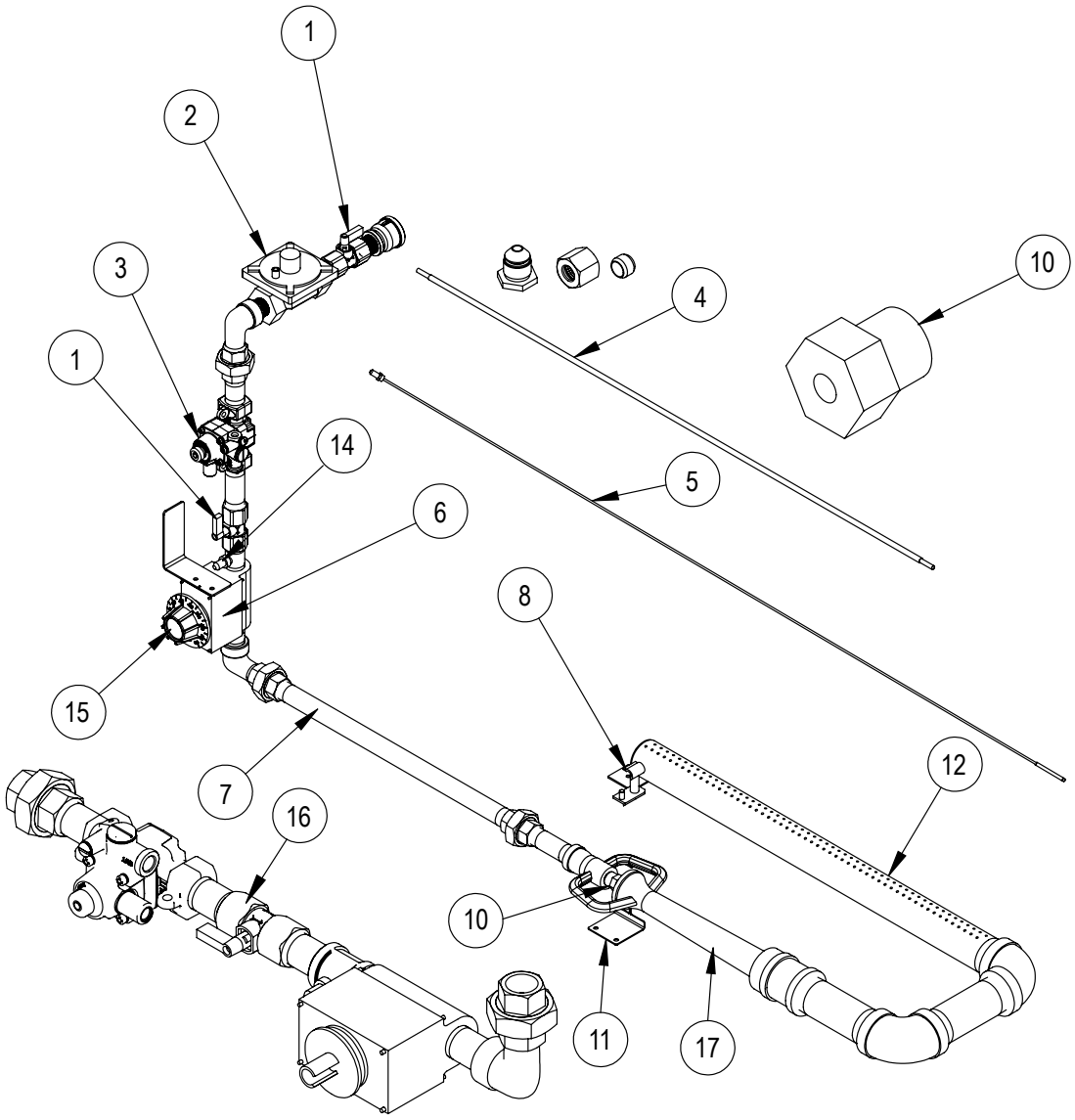

REF. NO.	PART NO.	DESCRIPTION
1	70380	BALL VALVE, 1/2"NPT
2*	71881	GAS REGULATOR, NAT
2*	71882	GAS REGULATOR, LP
3*	55127	TS11 SAFETY VALVE, 1/4" TUBE FIT
4	72290	PILOT TUBE KIT, 42"
5	100653	THERMOCOUPLE, 48" LEAD
6*	71880	THERMOSTAT, 300-650 W/KNOB
7	70299	1/2" NPT X 24" PIPE
8	72708	PILOT UPGRADE KIT, NAT OR LP
10	70384	ORIFICE, #30 (NAT)
10	70468	ORIFICE, #47 (LP)
11	70049	VENTURI STOPPER

REF. NO.	PART NO.	DESCRIPTION
12	71360	BURNER ASSY
14	70434	PRESSURE TAP, 1/8
15*	10392	KNOB, THERMOSTAT
16	70040	STACK ASSEMBLY
17	70094	VENTURI
	72596	VENTURI DISK
	72597	ORFICE HOLDER, MAIN BURNER
	72598	LOCKNUT, HEX 5/8"-18

** SEE "CE APPROVED COMPONENTS" AT THE END OF THIS DOCUMENT*

BURNER AND PIPING PARTS

SD 260 OVEN

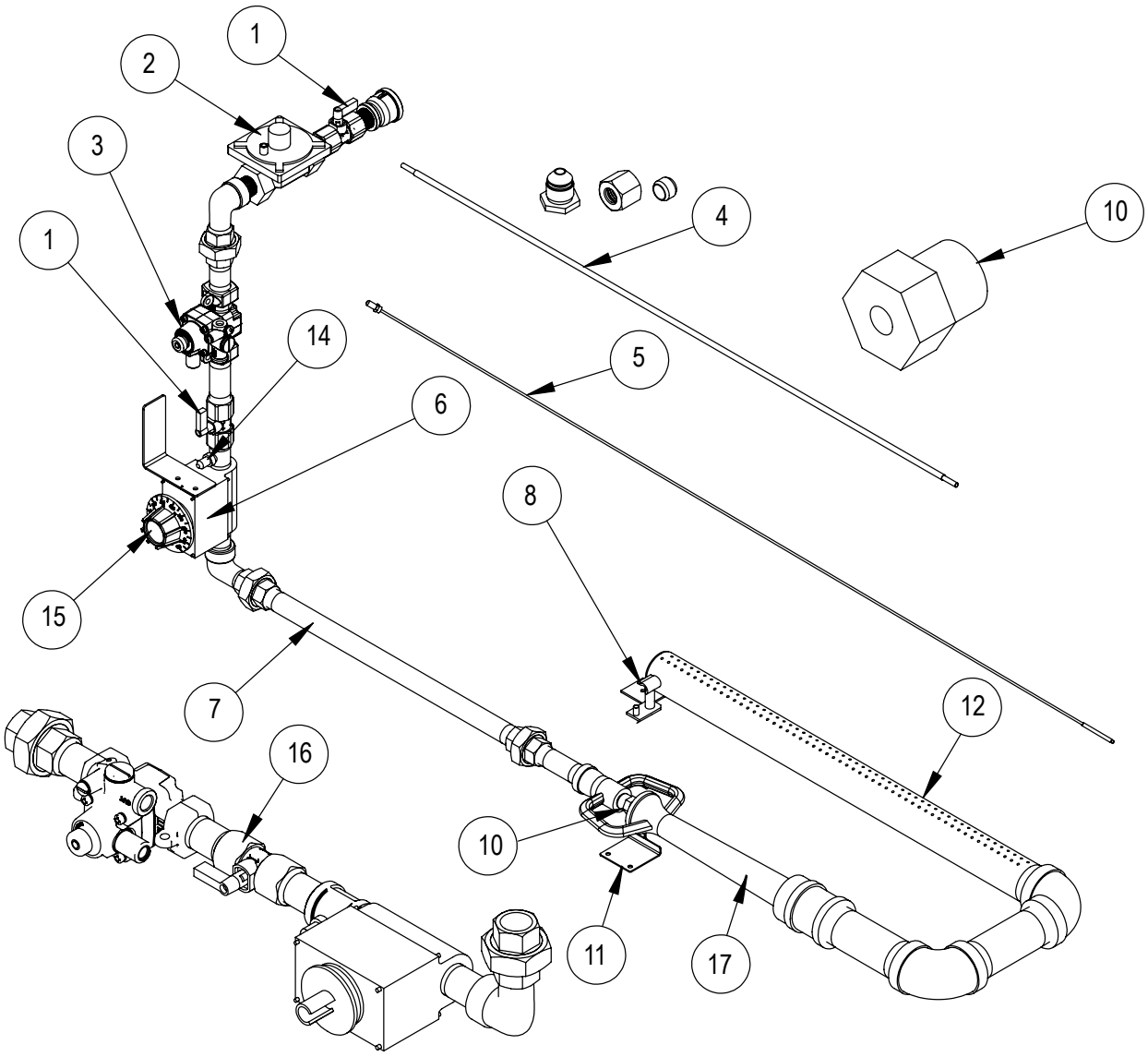

REF. NO.	PART NO.	DESCRIPTION
1	70380	BALL VALVE, 1/2" NPT
2*	71881	GAS REGULATOR, NAT
2*	71882	GAS REGULATOR, LP
3*	55127	TS11 SAFETY VALVE, 1/4" TUBE FIT
4	72290	PILOT TUBE KIT, 42"
5	100653	THERMOCOUPLE, 48" LEAD
6*	71880	THERMOSTAT, 300-650 W/KNOB
7	70042	1/2" NPT X 33-1/4" PIPE
8	72708	PILOT UPGRADE KIT, NAT OR LP
10	70469	ORIFICE, #25 (NAT)
10	70470	ORIFICE, #40 (LP)

REF. NO.	PART NO.	DESCRIPTION
11	70049	VENTURI STOPPER
12	70702	BURNER ASSY
14	70434	PRESSURE TAP, 1/8
15*	10392	KNOB, THERMOSTAT
16	70040	STACK ASSEMBLY
17	70094	VENTURI
	72596	VENTURI DISK
	72597	ORFICE HOLDER, MAIN BURNER
	72598	LOCKNUT, HEX 5/8"-18

** SEE "CE APPROVED COMPONENTS" AT THE END OF THIS DOCUMENT*

BURNER AND PIPING PARTS

PILOT UPGRADE SAFETY VALVE KIT FOR OVENS BUILT BEFORE 10/2008

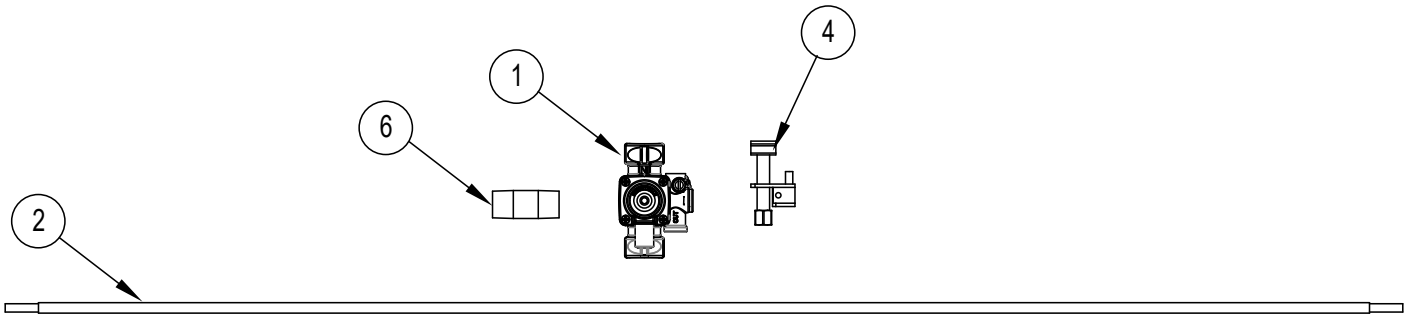

REF. NO.	PART NO.	DESCRIPTION
	70376	**PILOT UPGRADE SAFETY VALVE KIT INCLUDES THE FOLLOWING PARTS**
1	55127	TS11 SAFETY VALVE
2	70046	PILOT TUBING, 42"

REF. NO.	PART NO.	DESCRIPTION
4	72708	PILOT UPGRADE KIT, NAT OR LP
6	70233	NIPPLE, ½" X 2" BLACK

GAS CONVERSION KITS

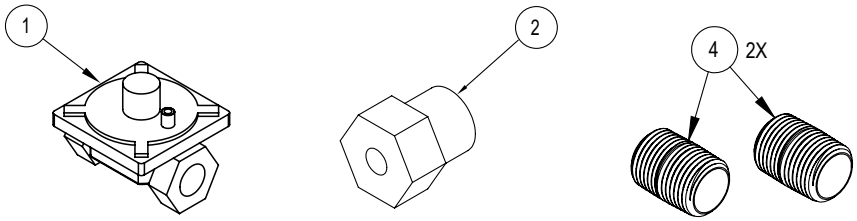

REF. NO.	PART NO.	DESCRIPTION
	71987	Natural to LP Gas Conversion Kit
1	70386	Gas Regulator, LP
2	See Chart	Burner Orifice, LP
3	72708	Pilot Upgrade Kit, NAT OR LP
4	71949	Close Nipple, 1/2 NPT" (Qty 2)

REF. NO.	PART NO.	DESCRIPTION
	71988	LP to Natural Gas Conversion Kit
1	70385	Gas Regulator, NAT
2	See Chart	Burner Orifice, NAT
3	72708	Pilot Upgrade Kit, NAT OR LP
4	71949	Close Nipple, 1/2 NPT" (Qty 2)

SD BURNER ORIFICES		
MODEL	**NATURAL**	**PROPANE**
SD236	70382	70471
SD248	70384	70468
SD260	70469	70470
SD448/SD1048	70381	70492
SD660/SD1060	70383	70491
SD866/SD10866	70383	70491

DOOR PARTS

SD 236 OVEN

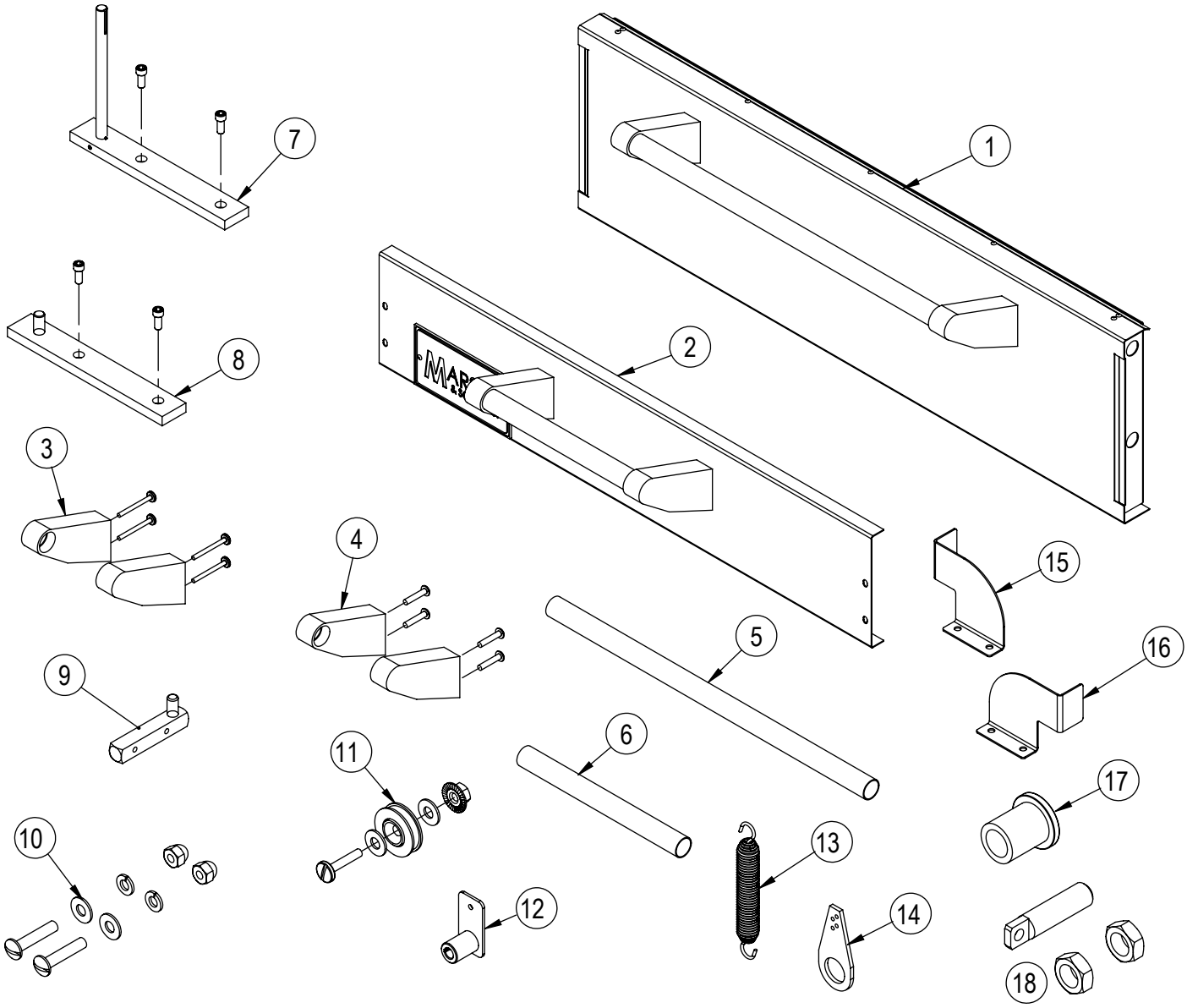

REF. NO.	PART NO.	DESCRIPTION
1	71918	BAKING DOOR SVC KIT, SD236
2	71984	BURNER DOOR SVC KIT, SD236
3	71892	SD DOOR HANDLE BRACKET KIT
4	71985	BURNER DOOR HANDLE BRACKET KIT
5	71138	20" DOOR HANDLE, S/S
6	71330	10" DOOR HANDLE, S/S
7	71886	SD OVEN DOOR HINGE KIT, LH
8	71890	SD 10" OVEN DOOR HINGE KIT, RH
9	70143	BURNER DOOR HINGE ASSY

REF. NO.	PART NO.	DESCRIPTION
10	71930	BURNER DOOR HINGE HARDWARE KIT
11	71910	SPRING WHEEL KIT
12	71331	COUPLING ASSY
13	70416	SPRING
14	70432	TEAR DROP, 4-3/8"
15	70671	BURNER DOOR STOP, RH
16	70107	BURNER DOOR STOP, LH
17	70154	BUSHING, DOOR PIN
18	72286	SPRING ANCHOR KIT

DOOR PARTS

SD 248 OVEN

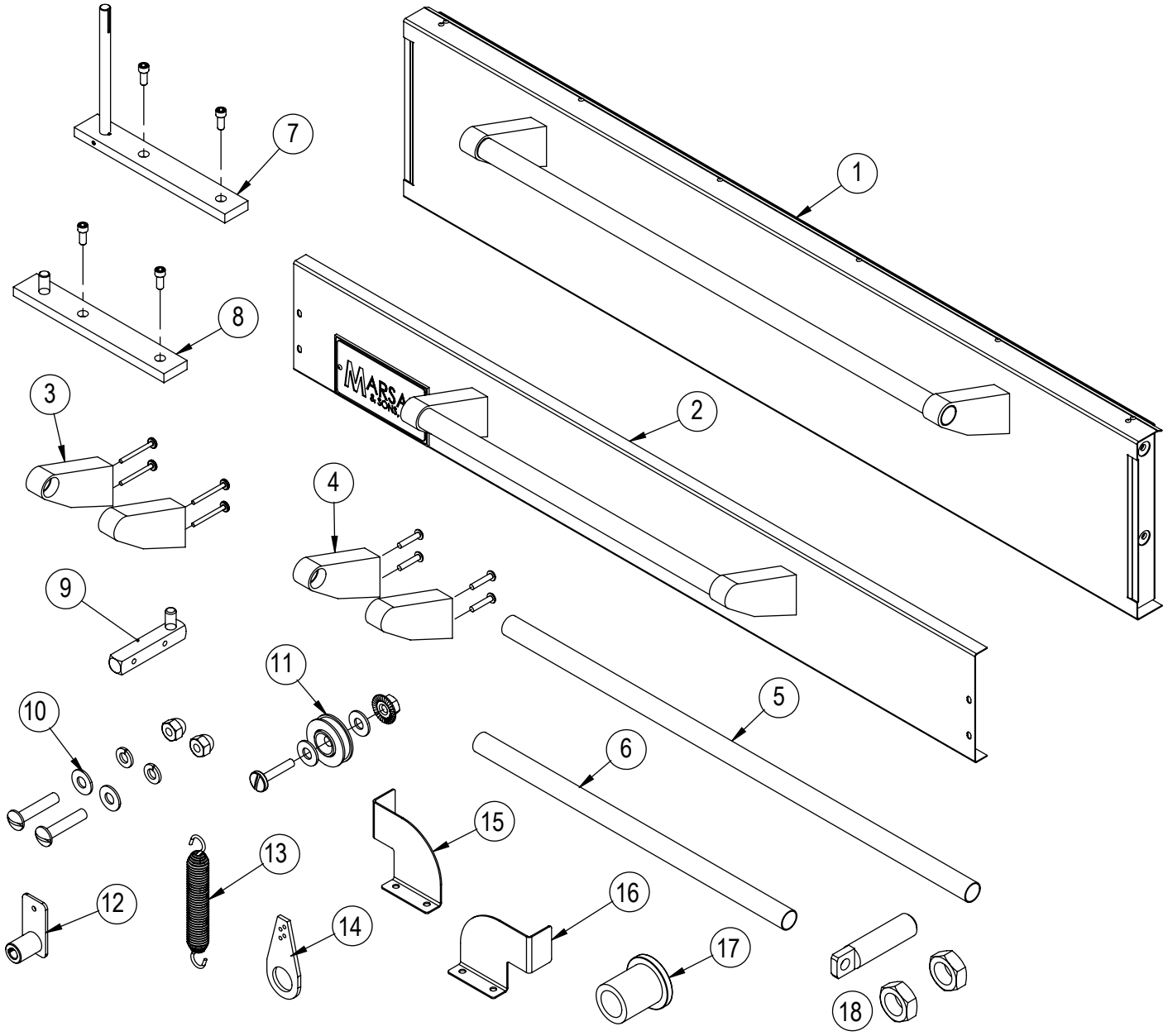

REF. NO.	PART NO.	DESCRIPTION
1	71913	BAKING DOOR SVC KIT, SD448
2	71982	BURNER DOOR SVC KIT, SD448
3	71892	SD DOOR HANDLE BRACKET KIT
4	71985	BURNER DOOR HANDLE BRACKET KIT
5	70429	30" DOOR HANDLE, S/S
6	71138	20" DOOR HANDLE, S/S
7	71886	SD OVEN DOOR HINGE KIT, LH
8	71890	SD 10" OVEN DOOR HINGE KIT, RH
9	70143	BURNER DOOR HINGE ASSY

REF. NO.	PART NO.	DESCRIPTION
10	71930	BURNER DOOR HINGE HARDWARE KIT
11	71910	SPRING WHEEL KIT
12	71331	COUPLING ASSY
13	70416	SPRING
14	70432	TEAR DROP, 4-3/8"
16	70671	BURNER DOOR STOP, RH
16	70107	BURNER DOOR STOP, LH
17	70154	BUSHING, DOOR PIN
18	72286	SPRING ANCHOR KIT

DOOR PARTS

SD 260 OVEN

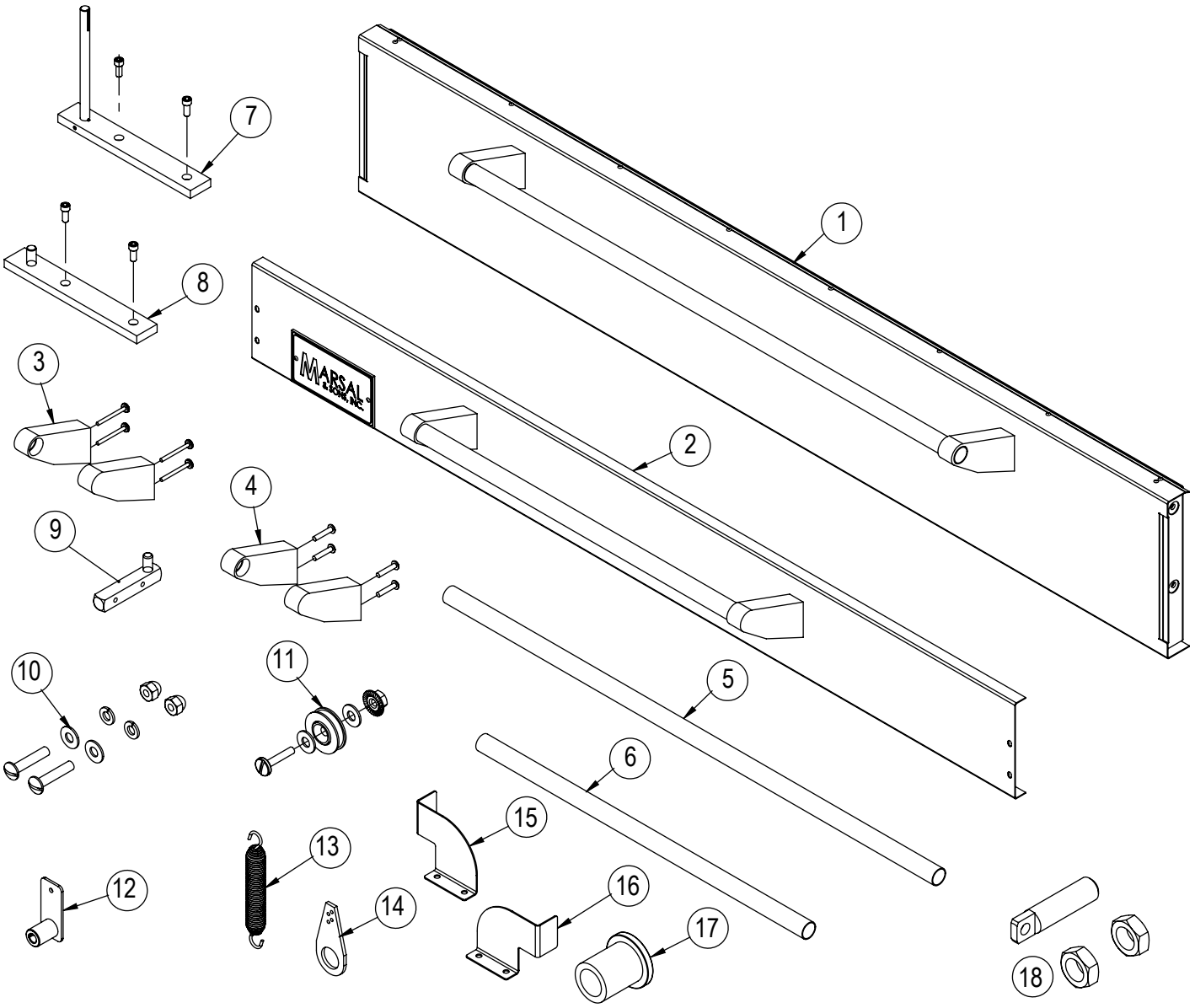

REF. NO.	PART NO.	DESCRIPTION
1	71912	BAKING DOOR SVC KIT, SD660
2	71981	BURNER DOOR SVC KIT, SD660
3	71892	SD DOOR HANDLE BRACKET KIT
4	71985	BURNER DOOR HANDLE BRACKET KIT
5	70430	36" DOOR HANDLE, S/S
6	70431	24" DOOR HANDLE, S/S
7	71886	SD OVEN DOOR HINGE KIT, LH
8	71890	SD 10" OVEN DOOR HINGE KIT, RH
9	70143	BURNER DOOR HINGE ASSY

REF. NO.	PART NO.	DESCRIPTION
10	71930	BURNER DOOR HINGE HARDWARE KIT
11	71910	SPRING WHEEL KIT
12	71043	COUPLING ASSY
13	70416	SPRING
14	70432	TEAR DROP, 4-3/8"
16	70671	BURNER DOOR STOP, RH
16	70107	BURNER DOOR STOP, LH
17	70154	BUSHING, DOOR PIN
18	72286	SPRING ANCHOR KIT

SD CONTROL DOOR AND FLUES

ALL OVENS

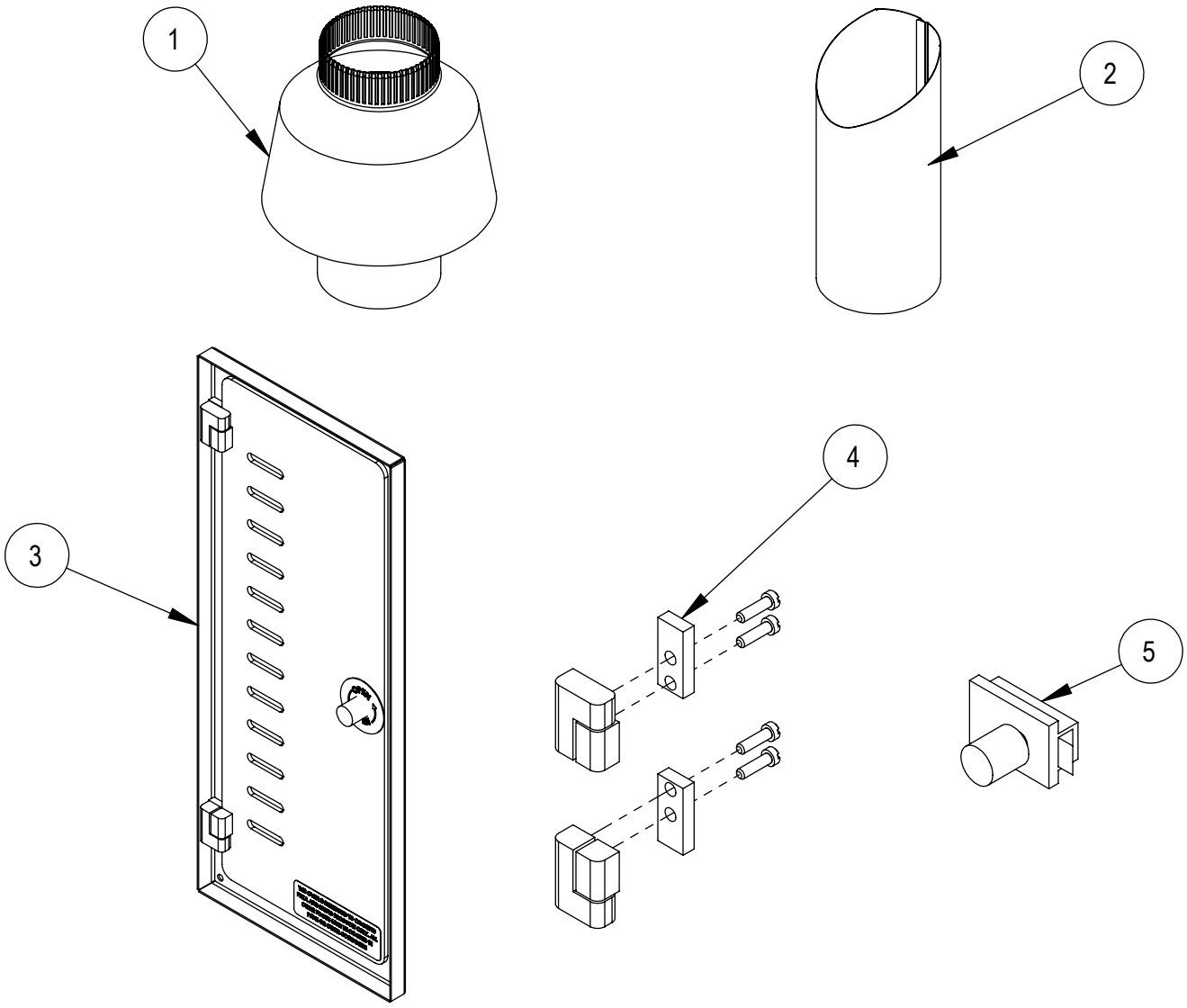

REF. NO.	PART NO.	DESCRIPTION
1	70427	DRAFT HOOD
2	70103	CHIMNEY TOP
3	71067	SD CONTROL DOOR ASSY W/ S/S TRIM
4	71905	CONTROL DOOR HINGE KIT
5	70128	LATCH, CONTROL PANEL

CE APPROVED COMPONENTS

ALL OVENS

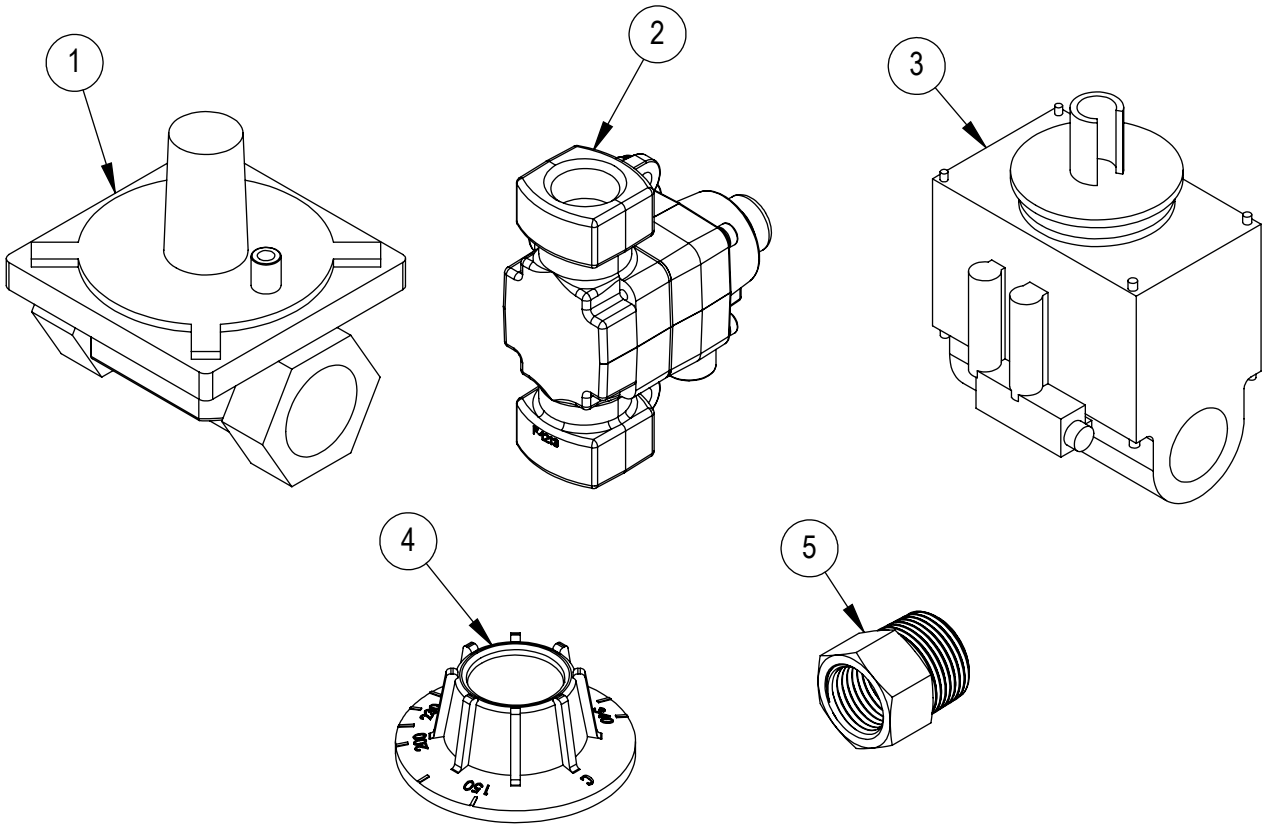

REF. NO.	PART NO.	DESCRIPTION
1	72288	PRESSURE REGULATOR, CE
2	72289	GAS VALVE, CE
3	72443	THERMOSTAT, CE
4	9635	KNOB, THERMOSTAT, CE
5	72276	ADAPTER, 1/2 NPT, FEM X 3/4 BSPT

ACCESSORIES

ALL OVENS

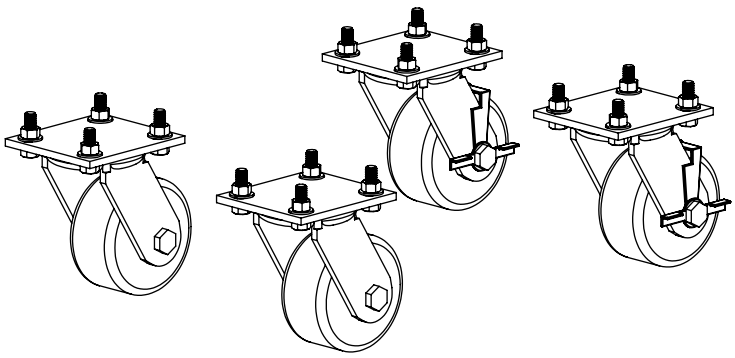

REF. NO.	PART NO.	DESCRIPTION
1	72546	CASTERS, SET OF 4